Kasper Møller Hansen
Au664287
202005339

Digitale kredsløb eksamen

1. (**10 marks**) Reduce the following Boolean expressions with minimum number of literals:

   a. $(y\bar{z} + \bar{x}w)(x\bar{y} + zw)$

$$(y\bar{z} + \bar{x}w)(x\bar{y} + zw) = 0 + 0 + 0 + \bar{x}zw = \boldsymbol{\bar{x}zw}$$

Distributive

   b. $wx\bar{y}\bar{z} + \mathrm{w}\bar{y} + w\bar{x}\bar{y}\bar{z}$

$$wx\bar{y}\bar{z} + \mathrm{w}\bar{y} + w\bar{x}\bar{y}\bar{z} = \boldsymbol{w\bar{y}}$$

Absorption

---

2. (15 marks) Write the following Boolean expression in sum of products form and simplify it afterwards using Karnaugh-Map.

$$(w + x + \bar{y})(\bar{x} + \bar{y} + \bar{z})$$

$$= \bar{x}w + \bar{y}w + \bar{z}w + x\bar{y} + x\bar{z} + \bar{x}\bar{y} + \bar{y} + \bar{y}\bar{z}$$

$$= \boldsymbol{\bar{y} + \bar{x}w + \bar{z}w + x\bar{z}}$$

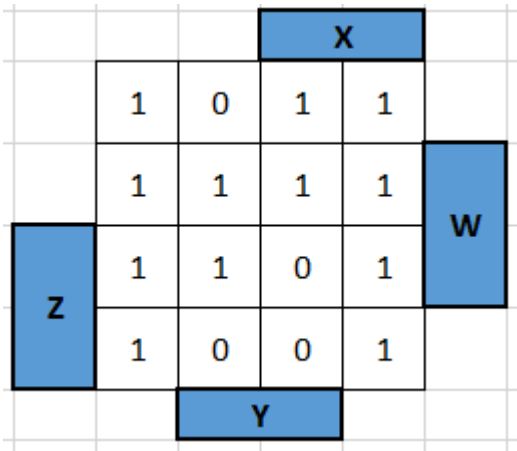

From k-map

$$\bar{y} + \bar{x}w + x\bar{z}$$

Or

$$\overline{\left((\bar{x}y\bar{w}) + (yz\bar{w})\right)} = \overline{(\bar{x}y\bar{w})}\ \overline{(yz\bar{w})}$$

$$= (x + \bar{y} + w)(\bar{y} + \bar{z} + w)$$

It the same expression just SOP and POS

---

3. (15 marks) Construct a 16×1 multiplexer using two 8×1 and one 2×1 multiplexers

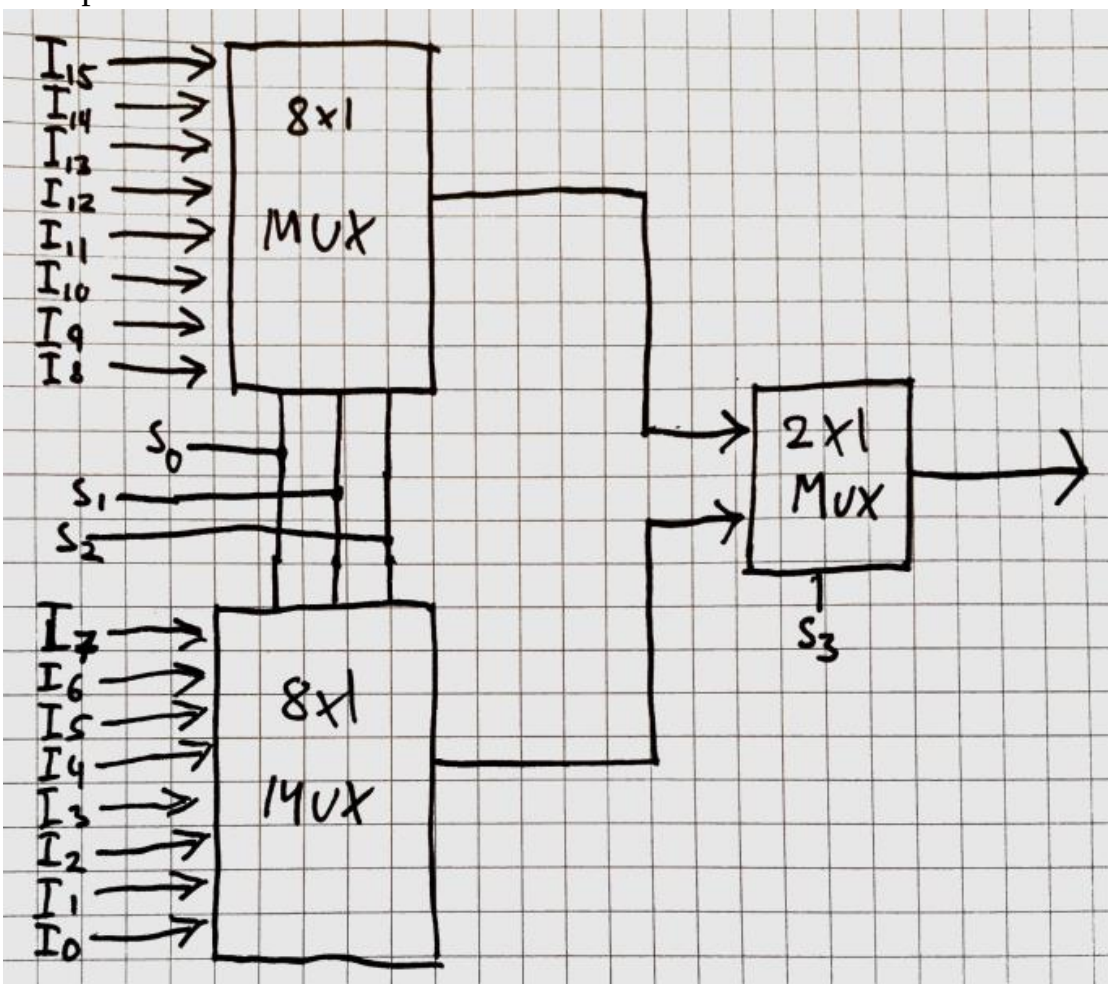

4. (**15 marks**) Implement the Boolean function $F(A,B,C,D) = \sum(1,3,4,11,12,13,14,15)$ using

   a. A 2×1 multiplexer

<table>
<tr><th>A</th><th>B</th><th>C</th><th>D</th><th>F</th><th>8x1</th><th>4x1</th><th>2x1</th></tr>
<tr><td>0</td><td>0</td><td>0</td><td>0</td><td>0</td><td rowspan="2">d</td><td rowspan="4">d</td><td rowspan="8">b'd+bc'd'</td></tr>
<tr><td>0</td><td>0</td><td>0</td><td>1</td><td>1</td></tr>
<tr><td>0</td><td>0</td><td>1</td><td>0</td><td>0</td><td rowspan="2">d</td></tr>
<tr><td>0</td><td>0</td><td>1</td><td>1</td><td>1</td></tr>
<tr><td>0</td><td>1</td><td>0</td><td>0</td><td>1</td><td rowspan="2">d'</td><td rowspan="4">c'd'</td></tr>
<tr><td>0</td><td>1</td><td>0</td><td>1</td><td>0</td></tr>
<tr><td>0</td><td>1</td><td>1</td><td>0</td><td>0</td><td rowspan="2">0</td></tr>
<tr><td>0</td><td>1</td><td>1</td><td>1</td><td>0</td></tr>
<tr><td>1</td><td>0</td><td>0</td><td>0</td><td>0</td><td rowspan="2">0</td><td rowspan="4">cd</td><td rowspan="8">b+cd</td></tr>
<tr><td>1</td><td>0</td><td>0</td><td>1</td><td>0</td></tr>
<tr><td>1</td><td>0</td><td>1</td><td>0</td><td>0</td><td rowspan="2">d</td></tr>
<tr><td>1</td><td>0</td><td>1</td><td>1</td><td>1</td></tr>
<tr><td>1</td><td>1</td><td>0</td><td>0</td><td>1</td><td rowspan="2">1</td><td rowspan="4">1</td></tr>
<tr><td>1</td><td>1</td><td>0</td><td>1</td><td>1</td></tr>
<tr><td>1</td><td>1</td><td>1</td><td>0</td><td>1</td><td rowspan="2">1</td></tr>
<tr><td>1</td><td>1</td><td>1</td><td>1</td><td>1</td></tr>
</table>

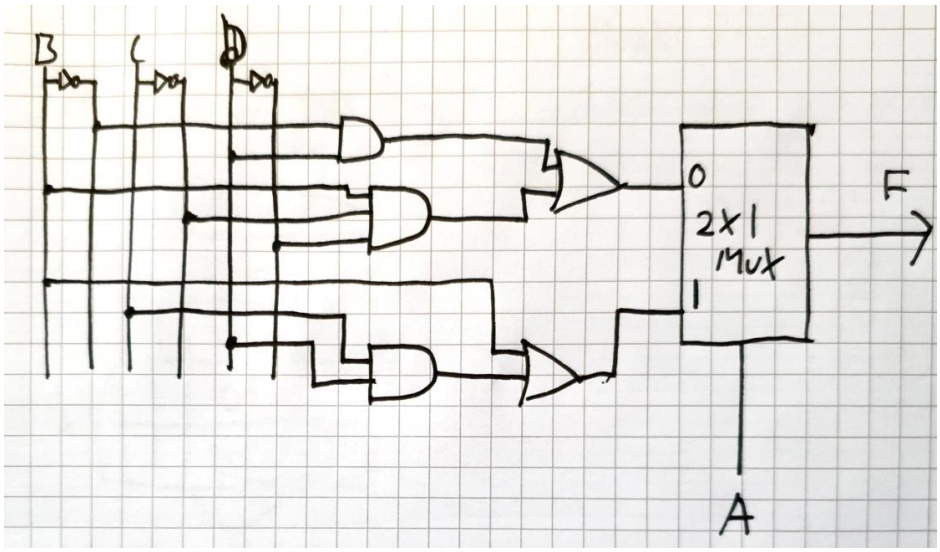

b. A decoder

Inputs				Outputs															
A	B	C	D	D0	D1	D2	D3	D4	D5	D6	D7	D8	D9	D10	D11	D12	D13	D14	D15
0	0	0	0	0															
0	0	0	1		1														
0	0	1	0			0													
0	0	1	1				1												
0	1	0	0					1											
0	1	0	1						0										
0	1	1	0							0									
0	1	1	1								0								
1	0	0	0									0							
1	0	0	1										0						
1	0	1	0											0					
1	0	1	1												1				
1	1	0	0													1			
1	1	0	1														1		
1	1	1	0															1	
1	1	1	1																1

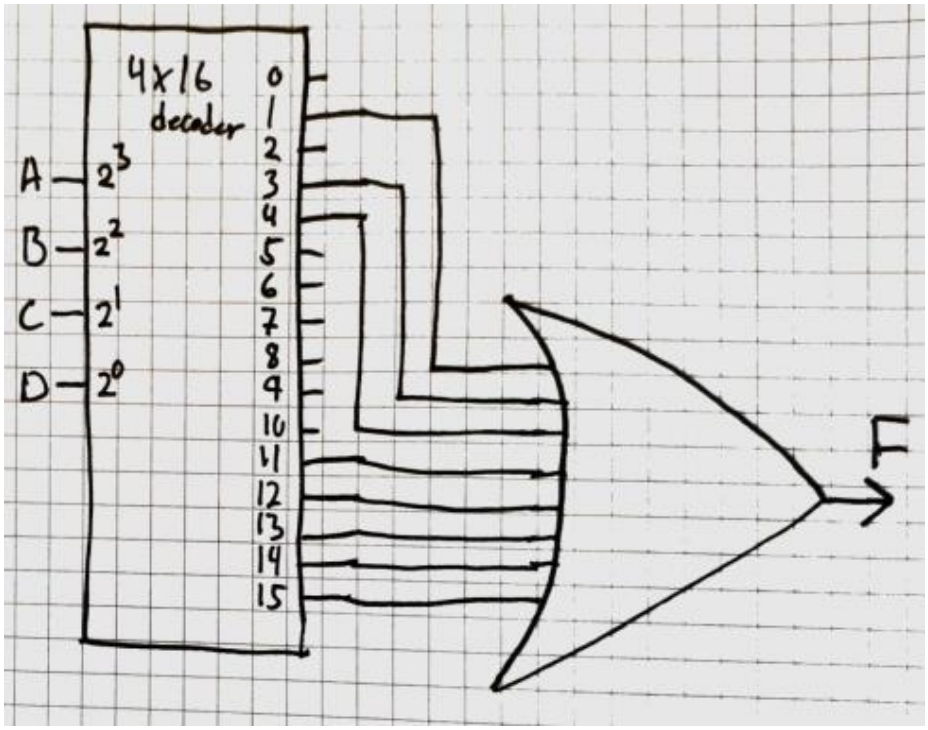

5. (**45 marks**) A sequential circuit has two JK flip-flops A and B, two inputs x and y, and one output of z. The flip-flop input equations and circuit output equation are:

$J_A = \bar{A}x + \bar{B}y \qquad K_A = B\bar{x}\bar{y}$

$J_B = \bar{A}xy \qquad K_B = \bar{A} + \bar{B}x$

$z = \bar{A}x + \bar{B}\bar{y}$

a. Draw the sequential circuits

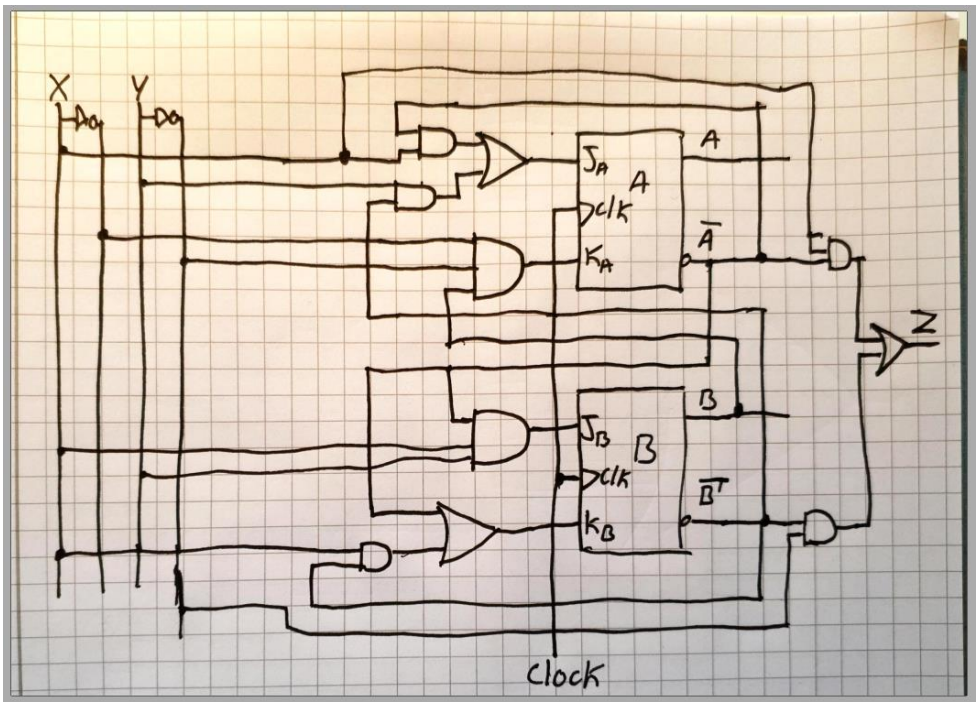

b. Derive the simplified state equations for A and B

$$A(t+1) = J_A\bar{A} + \overline{K_A}A = (\bar{A}x + \bar{B}y)A + \overline{(B\bar{x}\bar{y})}A$$

$$= 0 + A\bar{B}y + (\bar{B} + x + y)A = A\bar{B}y + A\bar{B} + Ax + Ay =$$

$$= A\bar{B} + Ax + Ay = \boldsymbol{A(\bar{B} + x + y)}$$

$$B(t+1) = J_B\bar{B} + \overline{K_B}B = (\bar{A}xy)\bar{B} + \overline{(\bar{A} + \bar{B}x)}B = \bar{A}\bar{B}xy + A(B + \bar{x})B$$

$$= \bar{A}\bar{B}xy + AB\bar{x} + AB = \boldsymbol{AB + \bar{A}\bar{B}xy}$$

c. Tabulate the state table

Present		imputs		Next		output
A	B	x	y	A(t+1)	B(t+1)	Z
0	0	0	0	0	0	1
0	0	0	1	0	0	0
0	0	1	0	0	0	1
0	0	1	1	0	1	1
0	1	0	0	0	0	0
0	1	0	1	0	0	0
0	1	1	0	0	0	1
0	1	1	1	0	0	1
1	0	0	0	1	0	1
1	0	0	1	1	0	0
1	0	1	0	1	0	1
1	0	1	1	1	0	0
1	1	0	0	0	1	0
1	1	0	1	1	1	0
1	1	1	0	1	1	0
1	1	1	1	1	1	0

d. Draw the state diagram of the circuit

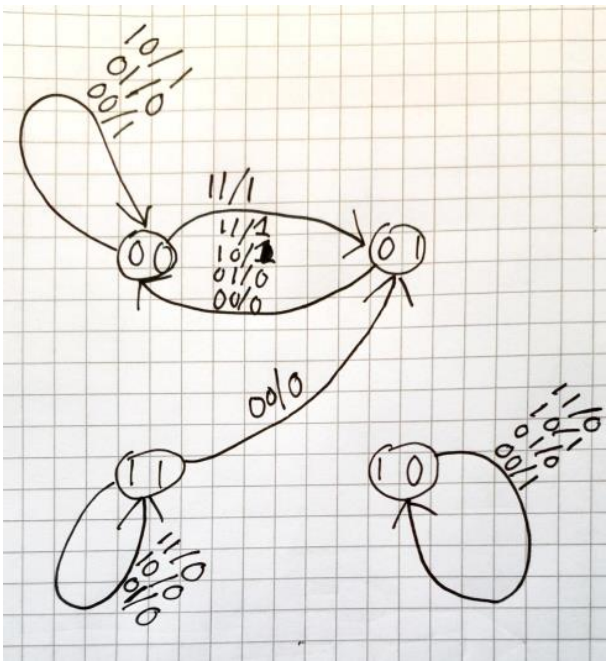
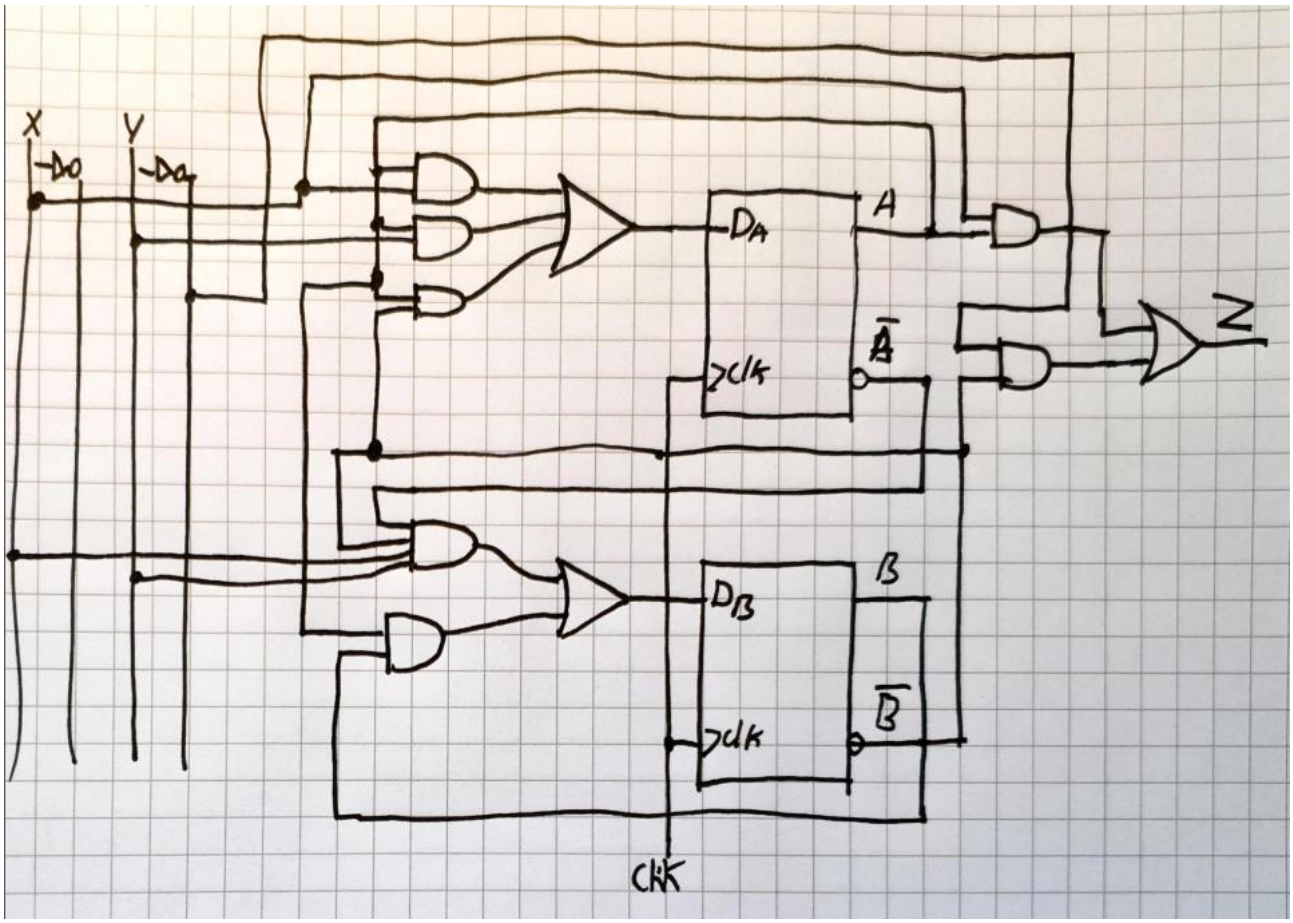
e. Re-draw the sequential circuit using a D-Flip-Flop